Dart Aerospace Ltd.
1270 Aberdeen St
Hawkesbury, ON
K6A 1K7
Canada

Tel (613) 632-5200
Fax 613 632-5246

(3)

D212-664-201TRN
Job Sheet 189225

Part No: D212-664-201TRN **Job Qty:** 1 pcs
Part Name: Crosstube Turning Detail

Part Weight: 0 lbs **Status:** New **Priority:** Medium
Job Created: 1/21/19 **Job Tracking No:**
Due Date: 2/8/19 **Created By:** Jesse White
Type: Stock **Description:**

Note: D212-664-241 REV E IPP Rev:A 08-03-06 new issue DD verified by:ec IPP Rev B 08.04.02 Removed polish EC verified DD

Ship Via:

Bill of Materials

Job Routing

Op No	Operation	Qty	Start Date	Due Date	Standard Setup Hrs	Standard Run Hrs	Workcenter/Supplier	Lead Time	DAS Sign-off
100	**Mori Seiki TL-40 - 1**	1 pcs		2/8/19	0.00	1.33	Mori Seiki TL-40 - 1		66 2019-02-12 9-89
110	**QC 2**	1 pcs		2/8/19	0.00	0.00	QC 2 - 1		
							QC 2 - 12		
							QC 2 - 14		
							QC 2 - 17		
							QC 2 - 19		
							QC 2 - 2		
							QC 2 - 20		
							QC 2 - 22		
							QC 2 - 23		
							QC 2 - 25		
							QC 2 - 32		
							QC 2 - 33		
							QC 2 - 35		
							QC 2 - 38		
							QC 2 - 39		
							QC 2 - 4		
							QC 2 - 40		
							QC 2 - 44		
							QC 2 - 45		
							QC 2 - 48		
							QC 2 - 49		
							QC 2 - 50		
							QC 2 - 51		
							QC 2 - 52		
							QC 2 - 54		
							QC 2 - 56		
							QC 2 - 57		
							QC 2 - 62		
							QC 2 - 63		

QC 2 - 66 DAS 66 9-89 2019-02-12

Plex 1/21/19 4:20 PM dart.white.jesse

Entered: _____ Date: _____

DART AEROSPACE

WORK ORDER NON-CONFORMANCE / ROUTE UPDATE

NCR No.

Route update only ☐

Job: _____

Part No. _____

DISPOSITION

Rework ☐
Scrap ☐
Use-as-is ☐

DEPARTMENT/PROCESS

Skid-tube ☐ Cross tube ☐ Eng. (Non-AW) ☐ Engineering ☐
Machining ☐ Small Fab ☐ Prod. Eng. Coor. ☐ Water Jet ☐
Large Fab ☐ Finishing ☐ Rec/Store/Packaging ☐ Supplier ☐
Quality ☐

Date :	Sequence #:	QTY Affected :	MRB (QSI042)

Description Work Order Deviation	Disposition	Completed By
		Lead hand / Supervisor
		QC / QA Coordinator

Root Cause

Operator ☐
Manufacturing Process ☐
Equip/Tooling ☐
Handling/Presservation ☐
Material ☐
Product Improvement ☐
Process Improvement ☐
Human Factors ☐

FAULT CATEGORY

☐ Pressure/Forced	☐ Contamination	☐ Power Loss/Surge	☐ Positioned Wrong
☐ Bending	☐ Misaligned/off center	☐ Folio/Program	☐ Outside Tolerance
☐ Crushing	☐ BOM/Route	☐ Grain Direction	☐ Drawing
☐ Cracks	☐ Broken/Damage/Defect	☐ Weld	☐ Finish
☐ Crimp/Kink/Ripple/Wave/Twist	☐ Incomplete/Unclear Instructions	☐ Wrong Stock Pulled	☐ Part Lost/Missing
☐ Marks/Chatter	☐ Drill Holes	☐ Out of Sequence	☐ Misread
☐ Mislabeled	☐ Fit/Function	☐ Off-set/Set-up	

Other/Details:

				QC 2 - 8	DAS
120 **Mori Seiki TL-40 - 1 - B4B**	1 pcs	2/8/19	0.00 1.33	Mori Seiki TL-40 - 1 - B4B	66 2019-02-14
130 **QC 2**	1 pcs	2/8/19	0.00 0.00	QC 2 - 1	9-89
				QC 2 - 12	
				QC 2 - 14	
				QC 2 - 17	
				QC 2 - 19	
				QC 2 - 2	
				QC 2 - 20	
				QC 2 - 22	
				QC 2 - 23	
				QC 2 - 25	
				QC 2 - 32	
				QC 2 - 33	
				QC 2 - 35	
				QC 2 - 38	
				QC 2 - 39	
				QC 2 - 4	
				QC 2 - 40	
				QC 2 - 44	
				QC 2 - 45	
				QC 2 - 48	
				QC 2 - 49	
				QC 2 - 50	
				QC 2 - 51	
				QC 2 - 52	
				QC 2 - 54	
				QC 2 - 56	
				QC 2 - 57	
				QC 2 - 62	
				QC 2 - 63	
				QC 2 - 8	
140 **QC 8**	1 pcs	2/8/19	0.00 0.00	QC 8 - 12	
				QC 8 - 14	
				QC 8 - 17	
				QC 8 - 20	
				QC 8 - 25	
				QC 8 - 3	
				QC 8 - 32	
				QC 8 - 33	
				QC 8 - 35	
				QC 8 - 38	
				QC 8 - 39	
				QC 8 - 4	
				QC 8 - 44	
				QC 8 - 45	
				QC 8 - 49	
				QC 8 - 58	
				QC 8 - 8	
				QC 8 - 9	
				QC 8 - 68	DAS 67 19-03-01 9-89
				QC 8 - 67	
				QC 8 - 1 (A)	
145 **Crosstubes - 2 - B4B**	1 pcs	2/8/19	0.00 0.25	Crosstubes - 1 - B4B	BB 4/4/19
				Crosstubes - 2 - B4B	
				Crosstubes - 3 - B4B	
				Crosstubes - 4 - B4B	
				Crosstubes - 5 - B4B	
				Crosstubes - 6 - B4B	

QC2-66 DAS 66 9-89 2019-02-14

Plex 1/21/19 4:20 PM dart.white.jesse

Entered: _____ Date: _____

WORK ORDER NON-CONFORMANCE / ROUTE UPDATE

DART AEROSPACE

NCR No.

Route update only ☐

Job: _____

Part No. _____

DISPOSITION

Rework ☐
Scrap ☐
Use-as-is ☐

DEPARTMENT/PROCESS

Skid-tube ☐ Cross tube ☐ Eng. (Non-AW) ☐ Engineering ☐
Machining ☐ Small Fab ☐ Prod. Eng. Coor. ☐ Water Jet ☐
Large Fab ☐ Finishing ☐ Rec/Store/Packaging ☐ Supplier ☐
Quality ☐

Date :	Sequence #:	QTY Affected :	MRB (QSI042)

Description Work Order Deviation	Disposition	Completed By
		Lead hand / Supervisor
		QC / QA Coordinator

Root Cause

Operator ☐
Manufacturing Process ☐
Equip/Tooling ☐
Handling/Presservation ☐
Material ☐
Product Improvement ☐
Process Improvement ☐
Human Factors ☐

FAULT CATEGORY

☐ Pressure/Forced	☐ Contamination	☐ Power Loss/Surge	☐ Positioned Wrong
☐ Bending	☐ Misaligned/off center	☐ Folio/Program	☐ Outside Tolerance
☐ Crushing	☐ BOM/Route	☐ Grain Direction	☐ Drawing
☐ Cracks	☐ Broken/Damage/Defect	☐ Weld	☐ Finish
☐ Crimp/Kink/Ripple/Wave/Twist	☐ Incomplete/Unclear Instructions	☐ Wrong Stock Pulled	☐ Part Lost/Missing
☐ Marks/Chatter	☐ Drill Holes	☐ Out of Sequence	☐ Misread
☐ Mislabeled	☐ Fit/Function	☐ Off-set/Set-up	

Other/Details:

D.R 19/4/19

150	**Crosstubes - Bend - 2 - B4B** 1 pcs	2/8/19	0.00 0.25	Crosstubes - Bend - B4B	
160	**QC 7** 1 pcs	2/8/19	0.00 0.00	QC 7 - 10	
				QC 7 - 13	
				QC 7 - 14	
				QC 7 - 15	
				QC 7 - 17	
				QC 7 - 18	
				QC 7 - 19	
				QC 7 - 2	
				QC 7 - 28	
				QC 7 - 3	
				QC 7 - 30	
				QC 7 - 34	
				QC 7 - 36	
				QC 7 - 37	
				QC 7 - 38	
				QC 7 - 41	
				QC 7 - 47	
				QC 7 - 48	
				QC 7 - 51	
				QC 7 - 58	
				QC 7 - 59	
				QC 7 - 6	
				QC 7 - 60	
				QC 7 - 9	
				QC 7 - 68	
				QC 7 - 50	
				QC 7 - 67	GP19-04-12.
170	**Packaging 3-1 - Stock - B4B** 1 pcs	2/8/19	0.00 0.00	Packaging 3 - 1 - B4B	
				Packaging 3 - 2 - B4B	
				Packaging 3 - 3 - B4B	
				Packaging 3 - 4 - B4B	
				Packaging 3 - 5 - B4B	
				Packaging 3 - 6 - B4B	
				Packaging 3 - 7 - B4B	
				Packaging 3 - 8 - B4B	
				Packaging 3 - 9 - B4B	
				Packaging 3 - 10 - B4B	
				Packaging 3 - 11 - B4B	
				Packaging 3 - 12 - B4B	
				Packaging 3 - 13 - B4B	
				Packaging 3 - 14 - B4B	
				Packaging 3 - 15 - B4B	
				Packaging 3 - 16 - B4B	
				Packaging 3 - 17 - B4B	
				Packaging 3 - 18 - B4B	
				Packaging 3 - 19 - B4B	
				Packaging 3 - 20 - B4B	
				Packaging 3 - 21 - B4B	
				Packaging 3 - 22 - B4B	
				Packaging 3 - 23 - B4B	
				Packaging 3 - 24 - B4B	
				Packaging 3 - 25 - B4B	
				Packaging 3 - 26 - B4B	
				Packaging 3 - 27 - B4B	
				Packaging 3 - 28 - B4B	
				Packaging 3 - 29 - B4B	
				Packaging 3 - 30 - B4B	
				Packaging 3 - 31 - B4B	

Plex 1/21/19 4:20 PM dart.white.jesse

Entered: _____ Date: _____

DART AEROSPACE

WORK ORDER NON-CONFORMANCE / ROUTE UPDATE

NCR No.

Route update only ☐

Job: _____

Part No. _____

DISPOSITION

Rework ☐
Scrap ☐
Use-as-is ☐

DEPARTMENT/PROCESS

Skid-tube ☐ Cross tube ☐ Eng. (Non-AW) ☐ Engineering ☐
Machining ☐ Small Fab ☐ Prod. Eng. Coor. ☐ Water Jet ☐
Large Fab ☐ Finishing ☐ Rec/Store/Packaging ☐ Supplier ☐
Quality ☐

Date :	Sequence #:	QTY Affected :	MRB (QSI042)

Description Work Order Deviation	Disposition	Completed By
		Lead hand / Supervisor
		QC / QA Coordinator

Root Cause

Operator ☐
Manufacturing Process ☐
Equip/Tooling ☐
Handling/Presservation ☐
Material ☐
Product Improvement ☐
Process Improvement ☐
Human Factors ☐

FAULT CATEGORY

☐ Pressure/Forced	☐ Contamination	☐ Power Loss/Surge	☐ Positioned Wrong
☐ Bending	☐ Misaligned/off center	☐ Folio/Program	☐ Outside Tolerance
☐ Crushing	☐ BOM/Route	☐ Grain Direction	☐ Drawing
☐ Cracks	☐ Broken/Damage/Defect	☐ Weld	☐ Finish
☐ Crimp/Kink/Ripple/Wave/Twist	☐ Incomplete/Unclear Instructions	☐ Wrong Stock Pulled	☐ Part Lost/Missing
☐ Marks/Chatter	☐ Drill Holes	☐ Out of Sequence	☐ Misread
☐ Mislabeled	☐ Fit/Function	☐ Off-set/Set-up	

Other/Details:

				Packaging 3 - 32 - B4B	
				Packaging 3 - 33 - B4B	
				Packaging 3 - 34 - B4B	DAS
				Packaging 3 - 35 - B4B	21 APR 12 2019
				Packaging 3 - 36 - B4B	9-39
180 **QC 21 - SA**	1 pcs	2/8/19	0.00 0.00	QC 21 - SA - 21	DAS
				QC 21 - SA - 70	21 APR 12 2019

Part Op Descriptions:
100 - Mori Seiki TL-40 (Mori Seiki CNC Lathe Large) 1-Fill tube with sand & install plugs DT8534 on both ends as per Folio FA114 2-Turn first side as per Folio FA114
110 - (QC2- Inspect parts off machine FAI/FAIB)
120 - Mori Seiki TL-40 (Mori Seiki CNC Lathe Large) 1-Turn second side as per Folio FA114
130 - (QC2- Inspect parts off machine FAI/FAIB)
140 - (QC8- Inspect parts - second check)
145 - (Crosstubes) GRIND ONLY TRANSITION LINES SMOOTH LONGITUDE WAY.
150 - Crosstubes) 1- handfinish X-TUBE INSIDE AND OUT
160 - (QC7-Inspect Chemical Conversion Coat)
170 - (Identify as per dwg & Stock Location:_____) Identify and stock in kanban rack Location:_____
180 - (QC21- Final Inspection - Work Order Release)

Job BOM

Part / Item	Component Name	Quantity	Operation	Container
D6006-129	Crosstube Material	1 pcs (1 ea)	100-Mori Seiki TL-40 - 1	F123969

Job Allocations

Operation	Component Part	Required	Inventory	Allocated
100-Mori Seiki TL-40 - 1	D6006-129	1	57	0

Part Specifications

Specifications could not be found.

Plex 1/21/19 4:20 PM dart.white.jesse

DART AEROSPACE

Dart Aerospace Ltd.
1270 Aberdeen Street
Hawkesbury, ON K6A 1K7
CANADA
TEL.: 1 613 632-5200
Email: sales@dartaero.com
www.dartaerospace.com

Container No: S152664

Part: D212-664-201TRN
Job No: 189225
Serial No/Batch: S152664
Revision: E
Inspector:
Exp Date:
Instructions:

Date: 02/12/19

Entered: _____ Date: _____

WORK ORDER NON-CONFORMANCE / ROUTE UPDATE

DART AEROSPACE

NCR No.

Route update only ☐

Job: _____

Part No. _____

DISPOSITION

Rework ☐
Scrap ☐
Use-as-is ☐

DEPARTMENT/PROCESS

Skid-tube ☐ Cross tube ☐ Eng. (Non-AW) ☐ Engineering ☐
Machining ☐ Small Fab ☐ Prod. Eng. Coor. ☐ Water Jet ☐
Large Fab ☐ Finishing ☐ Rec/Store/Packaging ☐ Supplier ☐
Quality ☐

Date :	Sequence #:	QTY Affected :	MRB (QSI042)

Description Work Order Deviation	Disposition	Completed By
		Lead hand / Supervisor
		QC / QA Coordinator

Root Cause

Operator ☐
Manufacturing Process ☐
Equip/Tooling ☐
Handling/Presservation ☐
Material ☐
Product Improvement ☐
Process Improvement ☐
Human Factors ☐

FAULT CATEGORY

☐ Pressure/Forced	☐ Contamination	☐ Power Loss/Surge	☐ Positioned Wrong
☐ Bending	☐ Misaligned/off center	☐ Folio/Program	☐ Outside Tolerance
☐ Crushing	☐ BOM/Route	☐ Grain Direction	☐ Drawing
☐ Cracks	☐ Broken/Damage/Defect	☐ Weld	☐ Finish
☐ Crimp/Kink/Ripple/Wave/Twist	☐ Incomplete/Unclear Instructions	☐ Wrong Stock Pulled	☐ Part Lost/Missing
☐ Marks/Chatter	☐ Drill Holes	☐ Out of Sequence	☐ Misread
☐ Mislabeled	☐ Fit/Function	☐ Off-set/Set-up	

Other/Details:

(3)

DART AEROSPACE LTD	Work Order:	189225
Description: Crosstube Assembly (205/212 High Aft)	Part Number:	D212-664-241
Inspection Dwg: D212-664-241 **Rev:** E		Page 1 of 2

FIRST ARTICLE INSPECTION CHECKLIST

Inspection Sheet Drawing Dimension		Tolerance	Actual Dimension	Accept	Reject	Method of Inspection	Comments
SIDE A	0.200	+/-0.010	.199	✓		CNC-08	
	R0.063	+/-0.010	.063	✓		RG	
	2.990	+0.005/-0.000	2.995	✓		CNC-04	
	5.237	+/-0.030	5.242	✓		CNC-08	
	2.600	+0.005/-0.000	2.605	✓		CNC-04	
	2.686	+0.005/-0.000	2.691	✓		↓	
	2.770	+0.005/-0.000	2.775	✓			
	2.854	+0.005/-0.000	2.859	✓			
	2.938	+0.005/-0.000	2.943	✓			
	3.021	+0.005/-0.000	3.026	✓		CNC-05	
	3.133	+0.005/-0.000	3.138	✓		"	
	3.179	+0.005/-0.000	3.184	✓		"	
SIDE B	0.200	+/-0.010	.196	✓		CNC-08	
	R0.063	+/-0.010	.063	✓		RG	
	2.990	+0.005/-0.000	2.995	✓		CNC-04	
	5.237	+/-0.030	5.247	✓		CNC-08	
	2.600	+0.005/-0.000	2.605	✓		CNC-04	
	2.686	+0.005/-0.000	2.691	✓		↓	
	2.770	+0.005/-0.000	2.775	✓			
	2.854	+0.005/-0.000	2.859	✓			
	2.938	+0.005/-0.000	2.943	✓			
	3.021	+0.005/-0.000	3.026	✓		CNC-05	
	3.133	+0.005/-0.000	3.138	✓		"	
	3.179	+0.005/-0.000	3.184	✓		"	
	124.362	+/-0.020	124.375	✓		Tape	

Entered: _____ Date: _____

DART AEROSPACE

WORK ORDER NON-CONFORMANCE / ROUTE UPDATE

NCR No.

Route update only ☐

Job: _____

Part No. _____

DISPOSITION

Rework ☐
Scrap ☐
Use-as-is ☐

DEPARTMENT/PROCESS

Skid-tube ☐ Cross tube ☐ Eng. (Non-AW) ☐ Engineering ☐
Machining ☐ Small Fab ☐ Prod. Eng. Coor. ☐ Water Jet ☐
Large Fab ☐ Finishing ☐ Rec/Store/Packaging ☐ Supplier ☐
Quality ☐

Date :	Sequence #:	QTY Affected :	MRB (QSI042)

Description Work Order Deviation	Disposition	Completed By
		Lead hand / Supervisor
		QC / QA Coordinator

Root Cause

Operator ☐
Manufacturing Process ☐
Equip/Tooling ☐
Handling/Presservation ☐
Material ☐
Product Improvement ☐
Process Improvement ☐
Human Factors ☐

FAULT CATEGORY

☐ Pressure/Forced	☐ Contamination	☐ Power Loss/Surge	☐ Positioned Wrong
☐ Bending	☐ Misaligned/off center	☐ Folio/Program	☐ Outside Tolerance
☐ Crushing	☐ BOM/Route	☐ Grain Direction	☐ Drawing
☐ Cracks	☐ Broken/Damage/Defect	☐ Weld	☐ Finish
☐ Crimp/Kink/Ripple/Wave/Twist	☐ Incomplete/Unclear Instructions	☐ Wrong Stock Pulled	☐ Part Lost/Missing
☐ Marks/Chatter	☐ Drill Holes	☐ Out of Sequence	☐ Misread
☐ Mislabeled	☐ Fit/Function	☐ Off-set/Set-up	

Other/Details:

(3)

DART AEROSPACE LTD	Work Order:	189225
Description: Crosstube Assembly (205/212 High Aft)	Part Number:	D212-664-241
Inspection Dwg: D212-664-241 **Rev:** E		Page 2 of 2

WALL THICKNESS MEASUREMENT

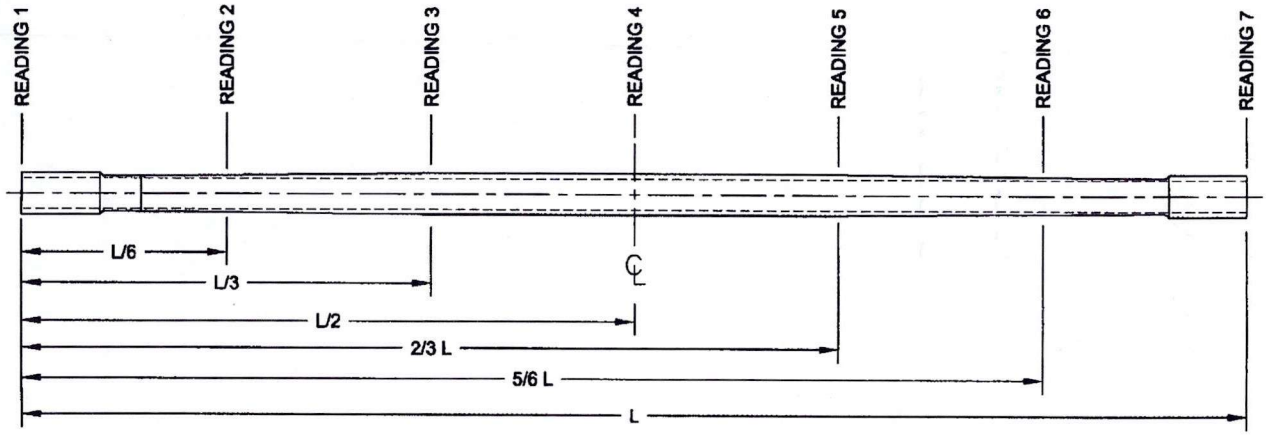

Location	WALL THICKNESS MEASUREMENT (IN)				Deviation Δw (max-min)	TOLERANCE
	w1	w2	w3	w4		
READING 1 L= 0"	.409	.395	.377	.400	.032	0.062"
READING 2 L=20.73	.325	.318	.306	.315	.019	
READING 3 L=41.45	.495	.490	.486	.496	.010	
READING 4 L=62.18	.532	.520	.521	.533	.013	
READING 5 L=82.91	.501	.485	.484	.502	.018	
READING 6 L=103.64	.330	.318	.298	.314	.032	
READING 7 L=124.36	.427	.396	.356	.398	.071	

Dwg Δ

0.385 −0.029

Mean = 0.3947 +0.009
Ecc = −0.0292 −0.029

Acceptable

DAS 12 9-89 19/2/27

Calibration Result

Actual Block Thickness 200-500

Sitescan 250 Measured Thickness: 200-500

Measured by:	DAS 66 9-89
Date:	2019-02-14

Audited by:	DAS 67 9-89
Date:	19-03-11

Preliminary Approval:	
Date:	

Rev	Date	Change	Revised by	Approved
A	05.04.27	New Issue (P/O D412-664-201)	KJ/JLM	
B	06.03.09	Tolerance for 5.237 was +/-0.001	KJ/JLM	
C	07.05.08	Dwg Rev. updated	KJ/JLM	
D	10.08.03	Dimension 124.362 was 124.36	KJ	
E	12.06.04	Wall thickness form added	KJ	
F	15.03.03	Dwg Rev updated	KJ	

Entered: _____ Date: _____

DART AEROSPACE

WORK ORDER NON-CONFORMANCE / ROUTE UPDATE

NCR No.

Route update only ☐

Job: _____

Part No. _____

DISPOSITION

Rework ☐
Scrap ☐
Use-as-is ☐

DEPARTMENT/PROCESS

Skid-tube ☐ Cross tube ☐ Eng. (Non-AW) ☐ Engineering ☐
Machining ☐ Small Fab ☐ Prod. Eng. Coor. ☐ Water Jet ☐
Large Fab ☐ Finishing ☐ Rec/Store/Packaging ☐ Supplier ☐
Quality ☐

Date :	Sequence #:	QTY Affected :	MRB (QSI042)

Description Work Order Deviation	Disposition	Completed By
		Lead hand / Supervisor
		QC / QA Coordinator

Root Cause

Operator ☐
Manufacturing Process ☐
Equip/Tooling ☐
Handling/Presservation ☐
Material ☐
Product Improvement ☐
Process Improvement ☐
Human Factors ☐

FAULT CATEGORY

☐ Pressure/Forced	☐ Contamination	☐ Power Loss/Surge	☐ Positioned Wrong
☐ Bending	☐ Misaligned/off center	☐ Folio/Program	☐ Outside Tolerance
☐ Crushing	☐ BOM/Route	☐ Grain Direction	☐ Drawing
☐ Cracks	☐ Broken/Damage/Defect	☐ Weld	☐ Finish
☐ Crimp/Kink/Ripple/Wave/Twist	☐ Incomplete/Unclear Instructions	☐ Wrong Stock Pulled	☐ Part Lost/Missing
☐ Marks/Chatter	☐ Drill Holes	☐ Out of Sequence	☐ Misread
☐ Mislabeled	☐ Fit/Function	☐ Off-set/Set-up	

Other/Details:

Item	Qty -241	Qty -241B	Part Number	Description
1	X		D212-664-241	CROSSTUBE ASSEMBLY (205/212 HIGH AFT)
2		X	D212-664-241B	CROSSTUBE ASSEMBLY (214 HIGH AFT)
3	1	1	D6006-129	CROSSTUBE
4	2		D2940-1	SUPPORT
5	4	4	D3595-063-530	RUBBER CUSHION
6		2	D5018-1	SUPPORT
7	4	4	MS21920-28	CLAMP (OR MS21920-30)
8	A/R	A/R	PROSEAL 890 B-2	SEALANT, AMS-S-8802 CLASS B-2

GENERAL NOTES:

1) MATERIAL: MANUFACTURED FROM D6006-129
   FINISHED LENGTH = 124.362±0.020
2) FINISH: a) CHEMICAL CONVERSION COAT PER DART QSI 005 4.1
   b) PRIME INSIDE AND OUTSIDE PER DART QSI 005 4.2
   c) MASK UNDERSIDE OF CROSSTUBE AS SHOWN (ZN C6-2 / C6-3, HATCHED AREA)
   d) PAINT OUTSIDE PER DART QSI 005 4.2
   e) REMOVE MASKING AND APPLY MATTE CLEAR COAT
3) TOLERANCES ARE PER DART QSI 018 UNLESS OTHERWISE NOTED.
4) UNITS: INCHES UNLESS OTHERWISE NOTED.
5) BREAK SHARP EDGES: 0.005 TO 0.010 MAX.
6) IDENTIFICATION: SCRIBE DART PART NUMBER "D212-664-XXX" AND BATCH NUMBER ON INSIDE OF CUFF USING VIBRATING STYLUS.
7) WEIGHT: D212-664-241/-241B = 44.2 lbs
8) PART IS SYMMETRIC ABOUT CENTERLINE.
9) EXTREME CARE MUST BE TAKEN TO PROTECT THE OUTSIDE SURFACE OF THE TUBE. THE OUTSIDE SURFACE MUST BE SMOOTH AND FREE FROM SURFACE DEFECTS SUCH AS SCRATCHES, NICKS, OR DENTS. DEFECTS UP TO 0.005" MAY BE BLENDED OUT LONGITUDINALLY. CIRCUMFERENTIAL GRIND MARKS ARE UNACCEPTABLE.

MACHINING

10) RUN CUTTER OFF PART. BLEND OUT EDGE LONGITUDINALY, TRANSITION SHOULD BE SMOOTH.

BENDING

11) BEND PROGRESSIVELY WITH A MINIMUM OF 5 PASSES. MAXIMUM TUBE FLATTENING DUE TO BENDING IS 7.2% (BASED ON O.D.) IN LOWER HALF OF R35.5 BEND AND 6% (BASED ON O.D.) ON REMAINING TUBE.
12) LIQUID PENETRANT INSPECT OUTSIDE SURFACE OF CROSSTUBE PER QSI 038.

ASSEMBLY

13) INSTALL D2940-1 / D5018-1 SUPPORT: ABRADE MATING SURFACE OF SUPPORT AND CROSSTUBE WITH 180-GRIT SANDPAPER AND REMOVE RESIDUE WITH MEK (OR EQUIVALENT). APPLY A 0.04" TO 0.07" THICK LAYER OF PROSEAL 890 CLASS B-2 (OR AMS-S-8802 CLASS B-2) SEALANT TO MATING SURFACE OF SUPPORT.
14) INSTALL MS21920-28 CLAMPS (OR -30) WITH D3595-063-530 RUBBER CUSHIONS TO SECURE THE SUPPORT ON TOP SIDE OF THE CROSSTUBE. ENSURE CLAMPS ARE ON TOP SIDE OF CROSSTUBE.
15) TORQUE CLAMPS 80 TO 100 IN-LB. ENSURE AT LEAST 1.5 THREADS SHOWING IN SAFETY AND THAT NUT HAS NOT BOTTOMED-OUT AFTER TORQUING. **PRIOR TO PACKAGING, RE-CHECK TORQUE ON CLAMPS AFTER PROSEAL 890 SEALANT HAS CURED FOR 72 HOURS.**

RELEASED
2014 -05- 26

REV.	DESCRIPTION	BY	DATE
E	D5018-1 WAS D2940-1 (-241B), PROSEAL WAS MAGNOBOND, NOTE 2: ADD INSPECTION WINDOW, NOTE 11: ALLOW 7.2% CRUSH, NOTE 15: ADD 72HR CURE AND RETORQUE FOR PROSEAL, ADD SHEET 3, CLAMPS REVERSED TO PREVENT CHAFING (ZN B7-2, B7-3), BEND HEIGHT TOL. NOW 0.25 WAS 0.13 (C1-4), INCORP DEO D-1/-2	CP	14.04.01
D	REFORMAT/REVISE GENERAL NOTES/PART LIST; REORGANIZED VIEWS AND REFORMATTED DRAWING TO CURRENT STANDARDS; ADD -241B (ZN D4-2, B4-2); REMOVED REF & ADD TOLERANCES (ZN D8-3 & C4-3, C6-3 & A8-3); RELOCATED FLAG #6 PER PAR 08-046 (ZN A5-3); MOVED TURNING DETAIL & UPDATED TOLERANCE TO SHEET 4	RF	09.09.30
C	REMOVE -1009 ABRASION STRIP; ADD MAGNOBOND 6398, CUSHION, REVERSE CLAMPS	PH	07.03.08
B	ADD HOLES FOR COMPATABILITY WITH BHT/AA SKIDTUBES	PH	05.02.04
A	NEW ISSUE	CP	00.12.12

DESIGN		DART AEROSPACE LTD	
DRAWN		HAWKESBURY, ONTARIO, CANADA	
CHECKED	DW	DRAWING NO.	REV. E
MFG. APPR.		D212-664-241	SHEET 1 OF 5
APPROVED		TITLE	SCALE
DE APPR.		CROSSTUBE ASS'Y (205/212 HI AFT)	NTS
DATE	14.04.01		

COPYRIGHT © 2000 BY DART AEROSPACE LTD
THIS DOCUMENT IS PRIVATE AND CONFIDENTIAL AND IS SUPPLIED ON THE EXPRESS CONDITION THAT IT IS NOT TO BE USED FOR ANY PURPOSE OR COPIED OR COMMUNICATED TO ANY OTHER PERSON WITHOUT WRITTEN PERMISSION FROM DART AEROSPACE LTD.

Entered: _____ Date: _____

DART AEROSPACE

WORK ORDER NON-CONFORMANCE / ROUTE UPDATE

NCR No.

Route update only ☐

Job: _____

Part No. _____

DISPOSITION

Rework ☐
Scrap ☐
Use-as-is ☐

DEPARTMENT/PROCESS

Skid-tube ☐ Cross tube ☐ Eng. (Non-AW) ☐ Engineering ☐
Machining ☐ Small Fab ☐ Prod. Eng. Coor. ☐ Water Jet ☐
Large Fab ☐ Finishing ☐ Rec/Store/Packaging ☐ Supplier ☐
Quality ☐

Date :	Sequence #:	QTY Affected :	MRB (QSI042)

Description Work Order Deviation	Disposition	Completed By
		Lead hand / Supervisor
		QC / QA Coordinator

Root Cause

Operator ☐
Manufacturing Process ☐
Equip/Tooling ☐
Handling/Presservation ☐
Material ☐
Product Improvement ☐
Process Improvement ☐
Human Factors ☐

FAULT CATEGORY

☐ Pressure/Forced	☐ Contamination	☐ Power Loss/Surge	☐ Positioned Wrong
☐ Bending	☐ Misaligned/off center	☐ Folio/Program	☐ Outside Tolerance
☐ Crushing	☐ BOM/Route	☐ Grain Direction	☐ Drawing
☐ Cracks	☐ Broken/Damage/Defect	☐ Weld	☐ Finish
☐ Crimp/Kink/Ripple/Wave/Twist	☐ Incomplete/Unclear Instructions	☐ Wrong Stock Pulled	☐ Part Lost/Missing
☐ Marks/Chatter	☐ Drill Holes	☐ Out of Sequence	☐ Misread
☐ Mislabeled	☐ Fit/Function	☐ Off-set/Set-up	

Other/Details:

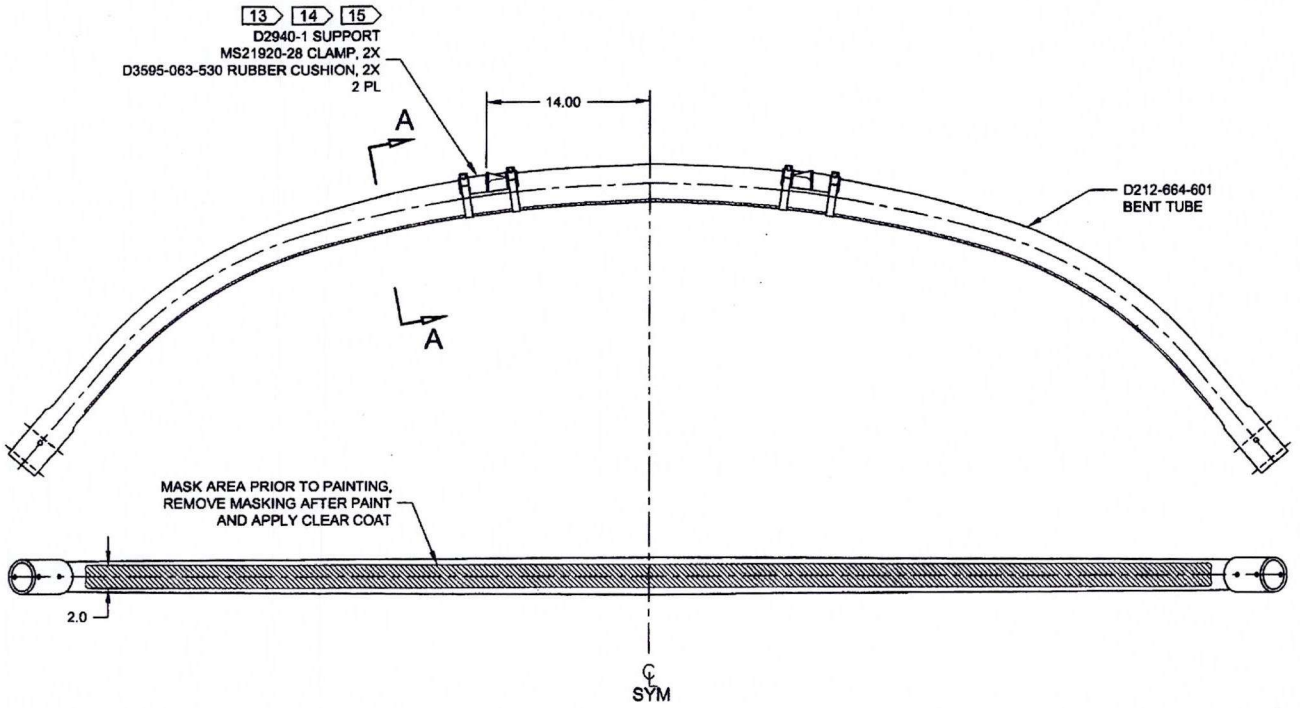

D212-664-241
ASSEMBLY DETAIL

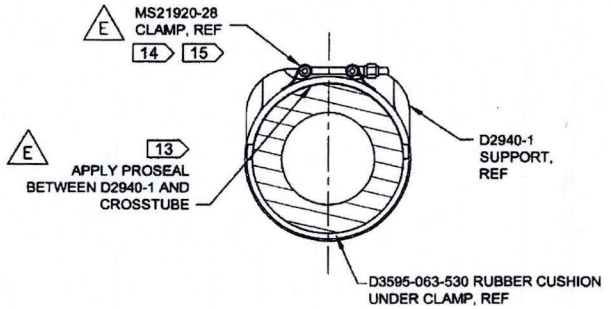

SECTION A-A
SCALE 4X

RELEASED
2014 -05- 26

DESIGN		**DART AEROSPACE LTD**	
DRAWN		HAWKESBURY, ONTARIO, CANADA	
CHECKED		DRAWING NO.	REV. E
MFG. APPR.		D212-664-241	SHEET 2 OF 5
APPROVED		TITLE	SCALE
DE APPR.		CROSSTUBE ASS'Y (205/212 HI AFT)	NTS
DATE	14.04.01		

COPYRIGHT © 2000 BY DART AEROSPACE LTD
THIS DOCUMENT IS PRIVATE AND CONFIDENTIAL AND IS SUPPLIED ON THE EXPRESS CONDITION THAT IT IS NOT TO BE USED FOR ANY PURPOSE OR COPIED OR COMMUNICATED TO ANY OTHER PERSON WITHOUT WRITTEN PERMISSION FROM DART AEROSPACE LTD.

Entered: _____ Date: _____

DART AEROSPACE

WORK ORDER NON-CONFORMANCE / ROUTE UPDATE

NCR No.

Route update only ☐

Job: _____

Part No. _____

DISPOSITION

Rework ☐
Scrap ☐
Use-as-is ☐

DEPARTMENT/PROCESS

Skid-tube ☐ Cross tube ☐ Eng. (Non-AW) ☐ Engineering ☐
Machining ☐ Small Fab ☐ Prod. Eng. Coor. ☐ Water Jet ☐
Large Fab ☐ Finishing ☐ Rec/Store/Packaging ☐ Supplier ☐
Quality ☐

Date :	Sequence #:	QTY Affected :	MRB (QSI042)

Description Work Order Deviation	Disposition	Completed By
		Lead hand / Supervisor
		QC / QA Coordinator

Root Cause

Operator ☐
Manufacturing Process ☐
Equip/Tooling ☐
Handling/Presservation ☐
Material ☐
Product Improvement ☐
Process Improvement ☐
Human Factors ☐

FAULT CATEGORY

☐ Pressure/Forced	☐ Contamination	☐ Power Loss/Surge	☐ Positioned Wrong
☐ Bending	☐ Misaligned/off center	☐ Folio/Program	☐ Outside Tolerance
☐ Crushing	☐ BOM/Route	☐ Grain Direction	☐ Drawing
☐ Cracks	☐ Broken/Damage/Defect	☐ Weld	☐ Finish
☐ Crimp/Kink/Ripple/Wave/Twist	☐ Incomplete/Unclear Instructions	☐ Wrong Stock Pulled	☐ Part Lost/Missing
☐ Marks/Chatter	☐ Drill Holes	☐ Out of Sequence	☐ Misread
☐ Mislabeled	☐ Fit/Function	☐ Off-set/Set-up	

Other/Details:

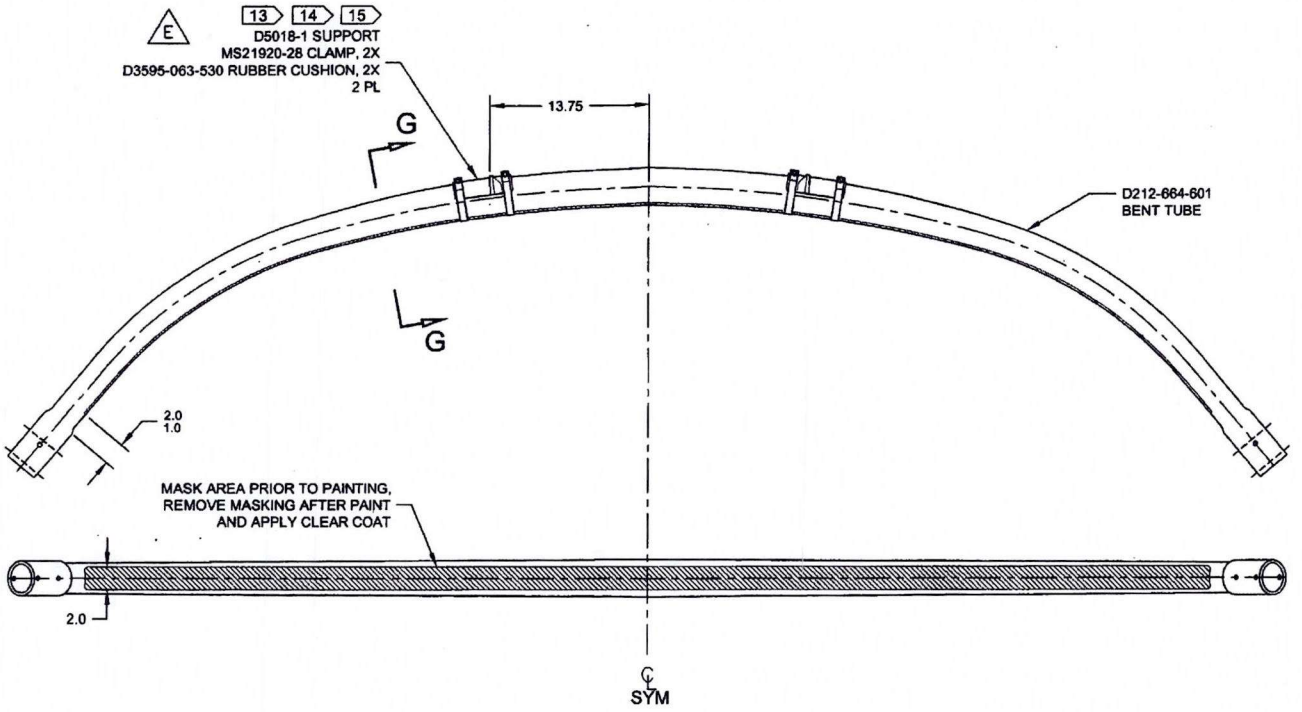

D212-664-241B
ASSEMBLY DETAIL E

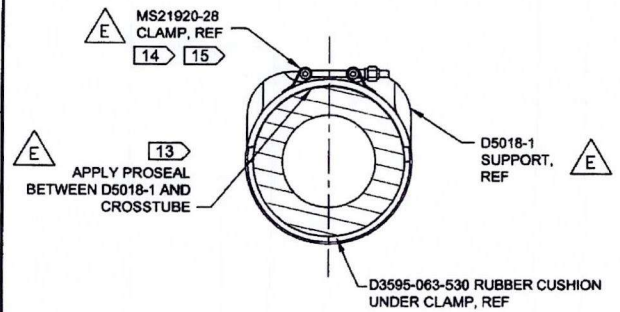

SECTION G-G
SCALE 4X

RELEASED
2014 -05- 26

DESIGN		**DART AEROSPACE LTD**	
DRAWN		HAWKESBURY, ONTARIO, CANADA	
CHECKED	DW	DRAWING NO.	REV. E
MFG. APPR.		D212-664-241	SHEET 3 OF 5
APPROVED		TITLE	SCALE
DE APPR.		CROSSTUBE ASS'Y (205/212 HI AFT)	NTS
DATE	14.04.01		

COPYRIGHT © 2000 BY DART AEROSPACE LTD
THIS DOCUMENT IS PRIVATE AND CONFIDENTIAL AND IS SUPPLIED ON THE EXPRESS CONDITION THAT IT IS NOT TO BE USED FOR ANY PURPOSE OR COPIED OR COMMUNICATED TO ANY OTHER PERSON WITHOUT WRITTEN PERMISSION FROM DART AEROSPACE LTD.

Entered: _____ Date: _____

DART AEROSPACE

WORK ORDER NON-CONFORMANCE / ROUTE UPDATE

NCR No.

Route update only ☐

Job: _____

Part No. _____

DISPOSITION

Rework ☐
Scrap ☐
Use-as-is ☐

DEPARTMENT/PROCESS

Skid-tube ☐ Cross tube ☐ Eng. (Non-AW) ☐ Engineering ☐
Machining ☐ Small Fab ☐ Prod. Eng. Coor. ☐ Water Jet ☐
Large Fab ☐ Finishing ☐ Rec/Store/Packaging ☐ Supplier ☐
Quality ☐

Date :	Sequence #:	QTY Affected :	MRB (QSI042)

Description Work Order Deviation	Disposition	Completed By
		Lead hand / Supervisor
		QC / QA Coordinator

Root Cause

Operator ☐
Manufacturing Process ☐
Equip/Tooling ☐
Handling/Presservation ☐
Material ☐
Product Improvement ☐
Process Improvement ☐
Human Factors ☐

FAULT CATEGORY

☐ Pressure/Forced ☐ Contamination ☐ Power Loss/Surge ☐ Positioned Wrong
☐ Bending ☐ Misaligned/off center ☐ Folio/Program ☐ Outside Tolerance
☐ Crushing ☐ BOM/Route ☐ Grain Direction ☐ Drawing
☐ Cracks ☐ Broken/Damage/Defect ☐ Weld ☐ Finish
☐ Crimp/Kink/Ripple/Wave/Twist ☐ Incomplete/Unclear Instructions ☐ Wrong Stock Pulled ☐ Part Lost/Missing
☐ Marks/Chatter ☐ Drill Holes ☐ Out of Sequence ☐ Misread
☐ Mislabeled ☐ Fit/Function ☐ Off-set/Set-up

Other/Details:

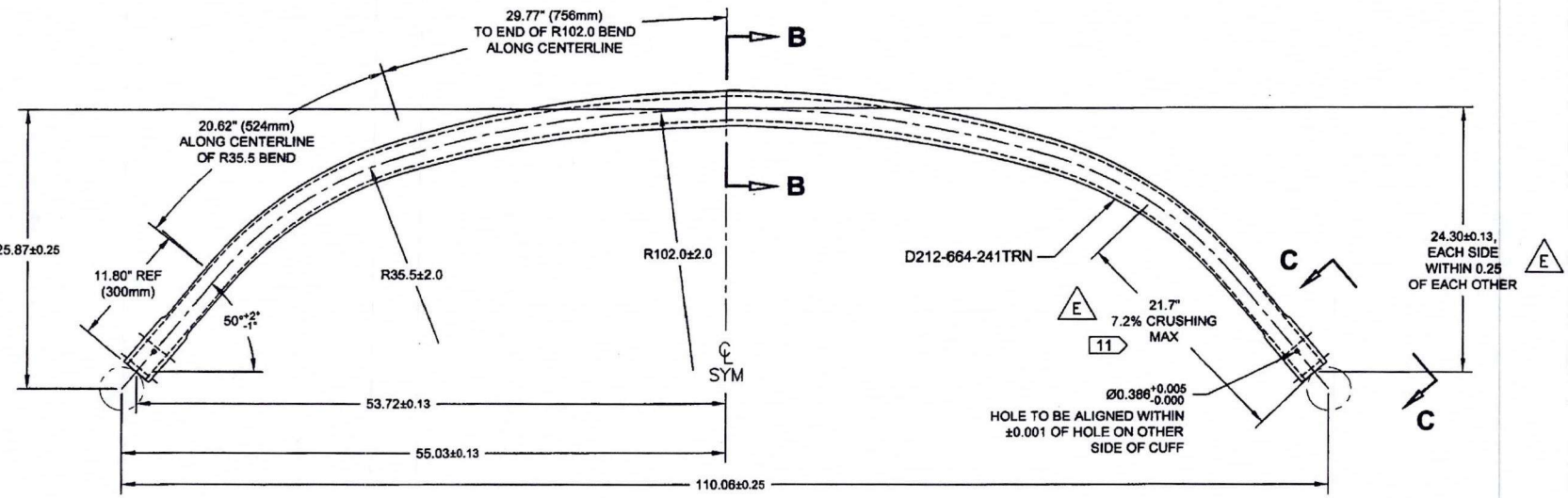

D212-664-601 11
BENDING AND DRILLING DETAIL

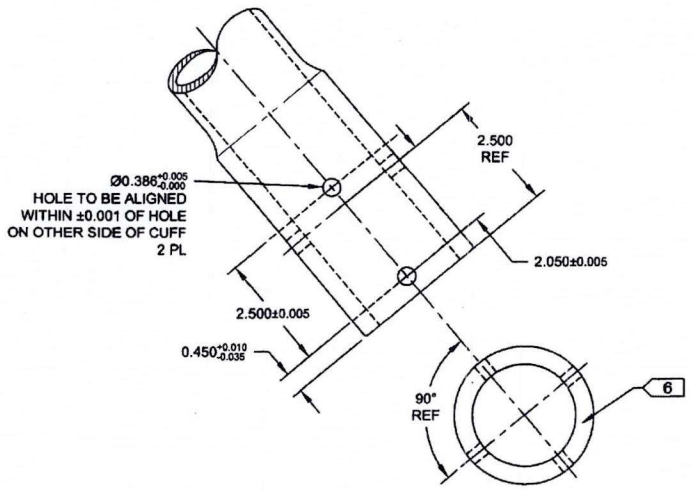

VIEW C-C: CUFF DETAIL
SCALE 3X

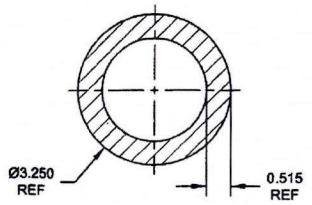

SECTION B-B
SCALE 4X

RELEASED
2014 -05- 26

DESIGN		DART AEROSPACE LTD	
DRAWN		HAWKESBURY, ONTARIO, CANADA	
CHECKED		DRAWING NO.	REV. E
MFG. APPR.		D212-664-241	SHEET 4 OF 5
APPROVED		TITLE	SCALE
DE APPR.		CROSSTUBE ASS'Y (205/212 HI AFT)	NTS
DATE	14.04.01		

COPYRIGHT © 2009 BY DART AEROSPACE LTD
THIS DOCUMENT IS PRIVATE AND CONFIDENTIAL AND IS SUPPLIED ON THE EXPRESS CONDITION THAT IT IS NOT TO BE USED FOR ANY PURPOSE OR COPIED OR COMMUNICATED TO ANY OTHER PERSON WITHOUT WRITTEN PERMISSION FROM DART AEROSPACE LTD.

Entered: _____ Date: _____

DART AEROSPACE

WORK ORDER NON-CONFORMANCE / ROUTE UPDATE

NCR No.

Route update only ☐

Job: _____

Part No. _____

DISPOSITION

Rework ☐
Scrap ☐
Use-as-is ☐

DEPARTMENT/PROCESS

Skid-tube ☐ Cross tube ☐ Eng. (Non-AW) ☐ Engineering ☐
Machining ☐ Small Fab ☐ Prod. Eng. Coor. ☐ Water Jet ☐
Large Fab ☐ Finishing ☐ Rec/Store/Packaging ☐ Supplier ☐
Quality ☐

Date :	Sequence #:	QTY Affected :	MRB (QSI042)

Description Work Order Deviation	Disposition	Completed By
		Lead hand / Supervisor
		QC / QA Coordinator

Root Cause

Operator ☐
Manufacturing Process ☐
Equip/Tooling ☐
Handling/Presservation ☐
Material ☐
Product Improvement ☐
Process Improvement ☐
Human Factors ☐

FAULT CATEGORY

☐ Pressure/Forced	☐ Contamination	☐ Power Loss/Surge	☐ Positioned Wrong
☐ Bending	☐ Misaligned/off center	☐ Folio/Program	☐ Outside Tolerance
☐ Crushing	☐ BOM/Route	☐ Grain Direction	☐ Drawing
☐ Cracks	☐ Broken/Damage/Defect	☐ Weld	☐ Finish
☐ Crimp/Kink/Ripple/Wave/Twist	☐ Incomplete/Unclear Instructions	☐ Wrong Stock Pulled	☐ Part Lost/Missing
☐ Marks/Chatter	☐ Drill Holes	☐ Out of Sequence	☐ Misread
☐ Mislabeled	☐ Fit/Function	☐ Off-set/Set-up	

Other/Details:

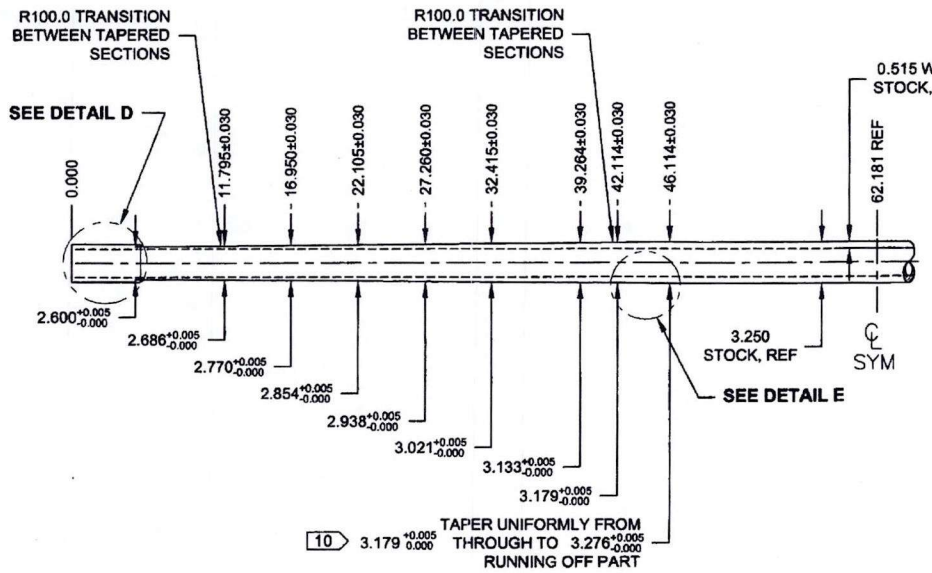

D212-664-241TRN
TURNING DETAIL

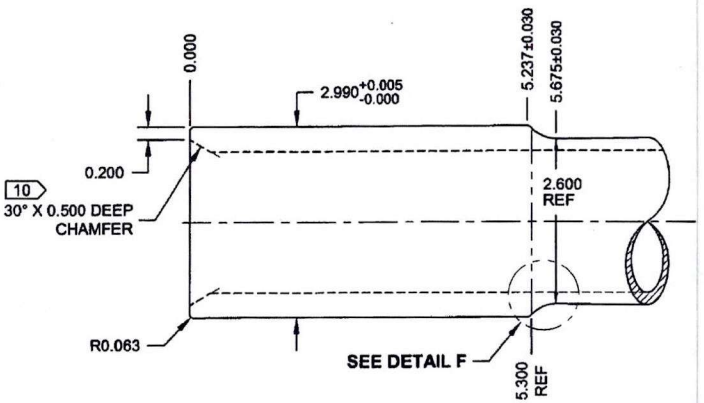

DETAIL D:
CROSSTUBE CUFF
SCALE 5X

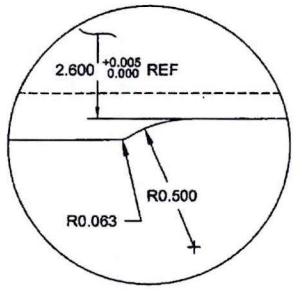

DETAIL F:
CUFF TRANSITION
SCALE 10X

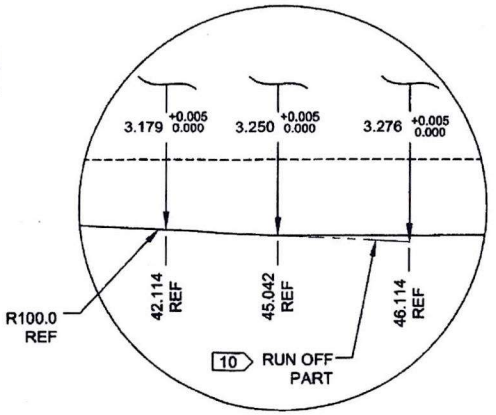

DETAIL E:
TAPER RUN-OFF
NOT TO SCALE

RELEASED
2014 -05- 26

DESIGN		**DART AEROSPACE LTD** HAWKESBURY, ONTARIO, CANADA	
DRAWN			
CHECKED	DW	DRAWING NO.	REV. E
MFG. APPR.		D212-664-241	SHEET 5 OF 5
APPROVED		TITLE	SCALE
DE APPR.		CROSSTUBE ASS'Y (205/212 HI AFT)	NTS
DATE	14.04.01		

COPYRIGHT © 2000 BY DART AEROSPACE LTD
THIS DOCUMENT IS PRIVATE AND CONFIDENTIAL AND IS SUPPLIED ON THE EXPRESS CONDITION THAT IT IS NOT TO BE USED FOR ANY PURPOSE OR COPIED OR COMMUNICATED TO ANY OTHER PERSON WITHOUT WRITTEN PERMISSION FROM DART AEROSPACE LTD.

Entered: _____ Date: _____

DART AEROSPACE

WORK ORDER NON-CONFORMANCE / ROUTE UPDATE

NCR No.

Route update only ☐

Job: _____

Part No. _____

DISPOSITION

Rework ☐
Scrap ☐
Use-as-is ☐

DEPARTMENT/PROCESS

Skid-tube ☐ Cross tube ☐ Eng. (Non-AW) ☐ Engineering ☐
Machining ☐ Small Fab ☐ Prod. Eng. Coor. ☐ Water Jet ☐
Large Fab ☐ Finishing ☐ Rec/Store/Packaging ☐ Supplier ☐
Quality ☐

Date :	Sequence #:	QTY Affected :	MRB (QSI042)

Description Work Order Deviation	Disposition	Completed By
		Lead hand / Supervisor
		QC / QA Coordinator

Root Cause

Operator ☐
Manufacturing Process ☐
Equip/Tooling ☐
Handling/Presservation ☐
Material ☐
Product Improvement ☐
Process Improvement ☐
Human Factors ☐

FAULT CATEGORY

☐ Pressure/Forced	☐ Contamination	☐ Power Loss/Surge	☐ Positioned Wrong
☐ Bending	☐ Misaligned/off center	☐ Folio/Program	☐ Outside Tolerance
☐ Crushing	☐ BOM/Route	☐ Grain Direction	☐ Drawing
☐ Cracks	☐ Broken/Damage/Defect	☐ Weld	☐ Finish
☐ Crimp/Kink/Ripple/Wave/Twist	☐ Incomplete/Unclear Instructions	☐ Wrong Stock Pulled	☐ Part Lost/Missing
☐ Marks/Chatter	☐ Drill Holes	☐ Out of Sequence	☐ Misread
☐ Mislabeled	☐ Fit/Function	☐ Off-set/Set-up	

Other/Details: